PD738(E)

Outdoor Fisheye Network Camera

2MP · 360° / 180° Panoramic View · IP66

Features

- 15 fps@1440x1440 HD
- Dewarping the Image via Fisheye Correction Processor
- Removable IR-cut Filter for Day & Night Function
- Real-time H.264, MPEG-4, and MJPEG Compression
- ROI (Region of Interest) Provide Outstanding e-PTZ Function
- Minimum 0.1 Lux for Night Vision
- WDR Enhancement for Visibility in Extremely Bright or Dark Environments
- Two-way Audio Communication, External Microphone Input and Audio Output
- Built-in MicroSD Card Slot, support SDHC/SDXC 64GB or above
- Weather-proof IP66-rated Housing
- Built-in 802.3af Compliant PoE (PD738E)
- ONVIF Compliant for Interoperability

360° Broad View

360° Source View

Quad View

3 PTZ with Source View

PD738(E)

Outdoor Fisheye Network Camera

2MP · 360° / 180° Panoramic View · IP66

System Information	
CPU	Multimedia SoC (System-on-Chip)
NOR Flash	16MB
RAM	512 MB
Camera Features	
Maximum Resolution	1440x1440
Lens Type	Fisheye Fix Lens
Focal Length	f=1.25 mm
Aperture	F= 2.0
Field of View	180° (Horizontal/Vertical/Diagonal)
WDR Technology	WDR Enhanced
Day/Night	Removable IR-cut filter for day & night function
Minimum Illumination	1.9 Lux @F2.8 (Color) ; 0.1 Lux @F2.8 (B/W)
Pan/Tilt/Zoom	ePTZ: 10x digital zoom
On-board Storage	Built-in MicroSD card slot, support SDHC/SDXC 64GB or above
Video	
Compression	H.264, MJPEG & MPEG-4
Display Mode	360° Source View, 360° Broad View, 180° Double Broad View, Triple View, Quad View, 3 PTZ with Source View
Maximum Frame Rate	15 fps at 1440x1440 15 fps at 1600x1200 15 fps at 1280x1024 15fps at 800x600, 640x480
Maximum Streams	3 simultaneous streams
S/N Ratio	Above 39 dB
Dynamic Range	100 dB
Video Streaming	Adjustable resolution, quality and bitrate ROI (Region of Interest) Provide Outstanding e-PTZ Function
Image Settings	Adjustable image size, quality and bitrate Configurable brightness, saturation, exposure control, sharpness, contrast, white balance, auto shutter control, auto gain control, noise reduction, EV luminance control, flip & mirror, privacy masks, time stamp, text overlay
Audio	
Audio Capability	Audio input/output (full duplex)
Compression	G.711u
Interface	External microphone input and Speaker Out
Effective Range	5 meters
Network	
Users	Live viewing for up to 10 clients
Protocols	HTTP,HTTPS, TCP/ IP,IPv4, UDP, SMTP, FTP, DHCP, DDNS, NTP, DNS, ARP,RTSP, RTP, UPnP, ONVIF(Profile S), Multicast

Interface	10 Base-T/100 BaseTX Ethernet(RJ-45)
ONVIF	Ver. 2.2
Intelligent Video	
Motion Detection	Ten-Window video motion detection
Alarm and Event	
Alarm Triggers	Video motion detection, manual trigger, digital input, periodical trigger, system boot, recording notification
Alarm Events	Event notification using digital output, HTTP, SMTP, FTP and NAS server File upload via HTTP, SMTP, FTP and NAS server
General	
Connectors	RJ-45 cable connector for Network/PoE connection Audio input Audio output DC 12V power input Digital input*1 Digital output*1 Video output*1 (NTSC/PAL)
Power Input	DC 12V IEEE 802.3af PoE
Power Consumption	Max. 5.1 W (DC 12V) Max. 5.3 W (PoE)
Casing	Weather-proof IP66-rated housing
Dimension	Ø:140 x 78.4mm
Weight	Net: 970g
Safety Certifications	CE, FCC Class B, LVD
Operating Temperature	0°C ~ 50°C
Operating Humidity	10% ~ 80%
System Requirements	
Operating System	Microsoft Windows 7/Vista/XP/2000
Web Browser	Mozilla Firefox 7 ~ 10, Internet Explorer 7, 8, 9, 10, 11 Chrome / Safari 4.0 or above
Other Players	VLC: 1.1.11 or above

Included Accessories

Quick installation guide, screws pack, software CD, mounting bracket (Optional)

Dimensions

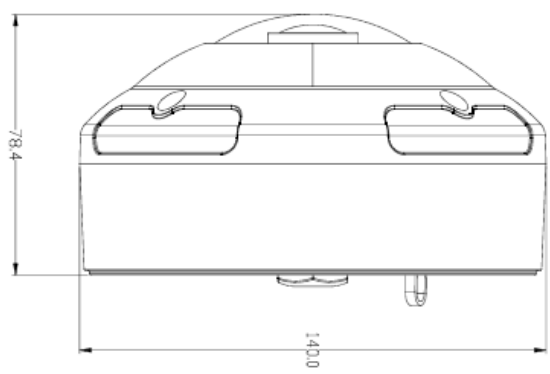

PiXORD Corporation
6F, No. 12, Innovation 1st Rd., Hsinchu Science Park, Hsinchu 30076, Taiwan
Tel: +886-3-5678818 Fax: +886-3-5678990 Mail: marketing@pixord.com

PiXORD
Moving Pictures Around The World